Protective Structures

Kate Collard

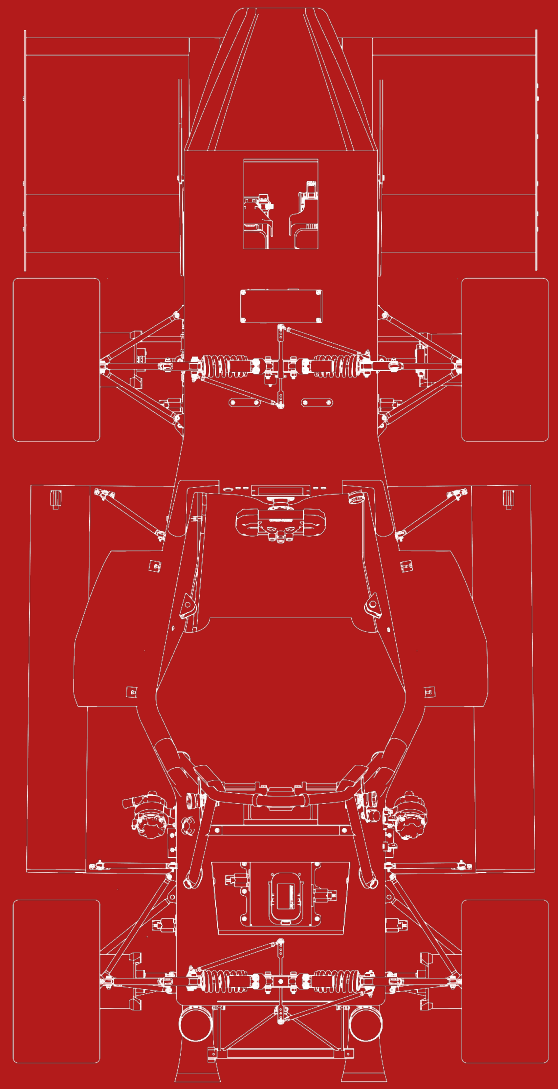

CORNELL RACING

Functions of Main and Front Roll Hoops

Main Function:

- Protect from rollover and impact
- Prevents cockpit from collapse

Goals:

- Weight Reduction

Function of Anti- Intrusion Plate (AIP)

Main Function:

- Stops things from entering cockpit, last barrier between car and drivers feet
- Transfers load of crash into rest of the car

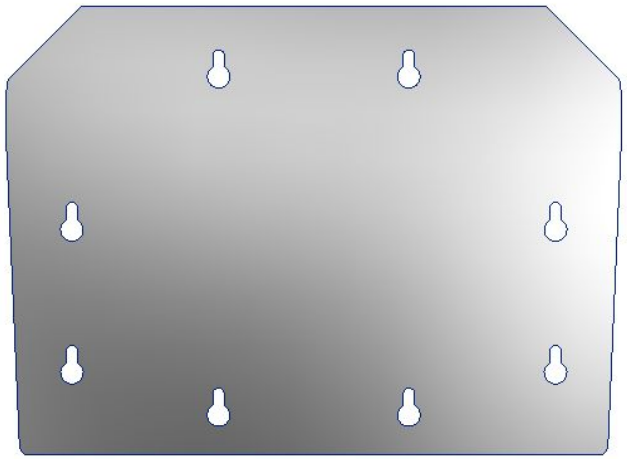

Goals:

- Weight Reduction
- Custom composite plate (spring)
- Serviceability to front bulkhead
  - Keyhole cutouts for mounting

Function of Impact Attenuator (IA)

Main Function:

- Absorbs crash energy to reduce force of impact through crumpling

Goals:

- Weight Reduction

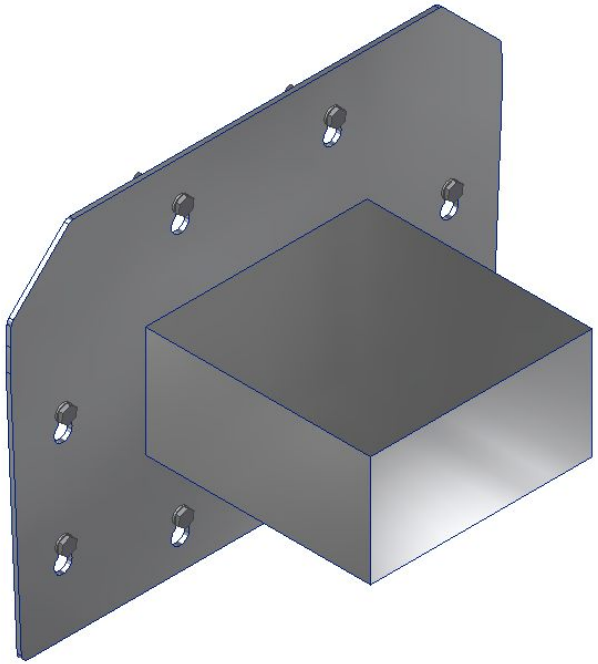

Function of Shoulder Harness

- Acts as a safety restraint for the shoulder belts
- Transfers restraint loads into MRH

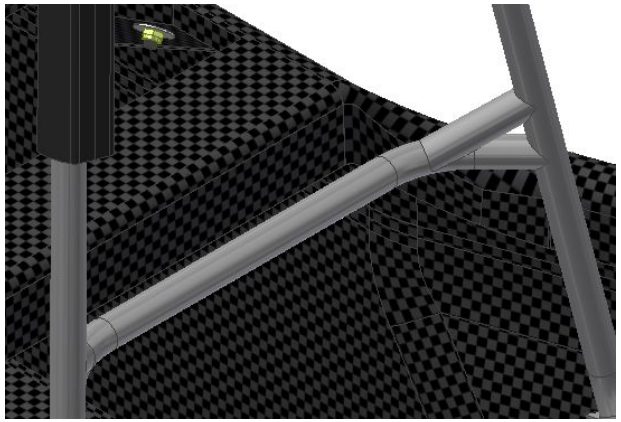

Goals:

- Weight Reduction
- Fully Rules Compliant

Design Requirements

Roll Hoops

- Rollover Protection Envelope (RPE) F.5.6.3: There must be a minimum of 50mm clearance between head and RPE
  - MRH to FRH RPE: c)
  - MRH to Braces: 122.428mm
- F.5.9.4: Main Hoop Bracing is 160 mm or less from top point of main hoop
  - 137.16 mm
- F.5.9.5: MRH Brace and hoop angle must be 30° or more
  - 37.1 degrees

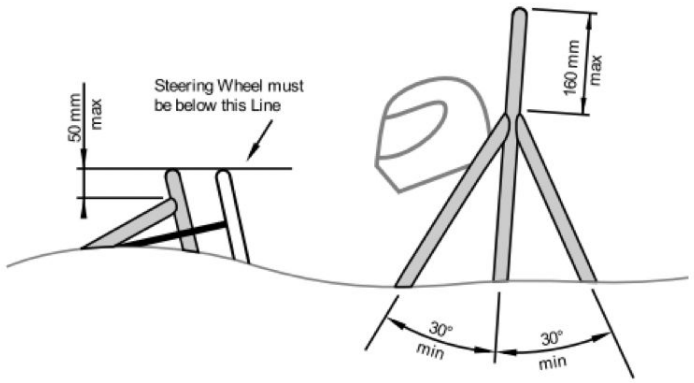

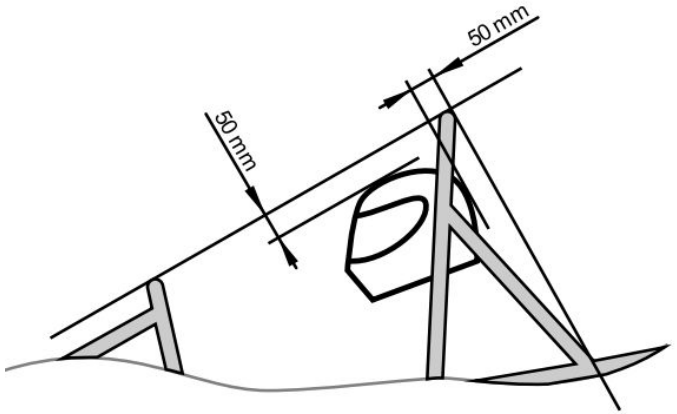

Design Requirements

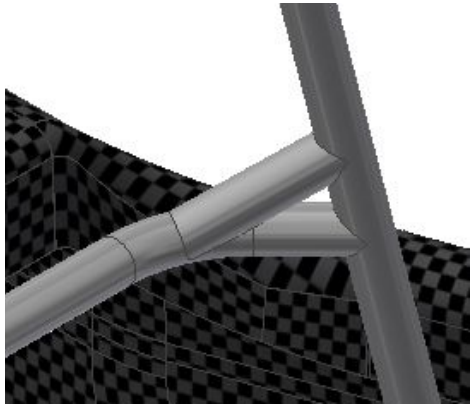

- F.6.5.2: The included angle in side view between the Shoulder Harness Bar and the braces must be no less than 30°
  - 40 degrees
- F.8.5.6.a: Lead to an increase in max allowable IA height (from 150mm to 175mm)
  - 154.9908mm

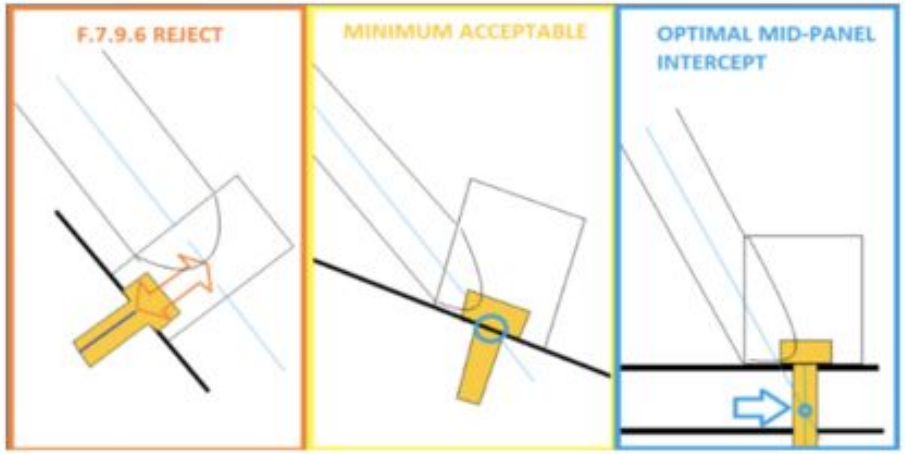

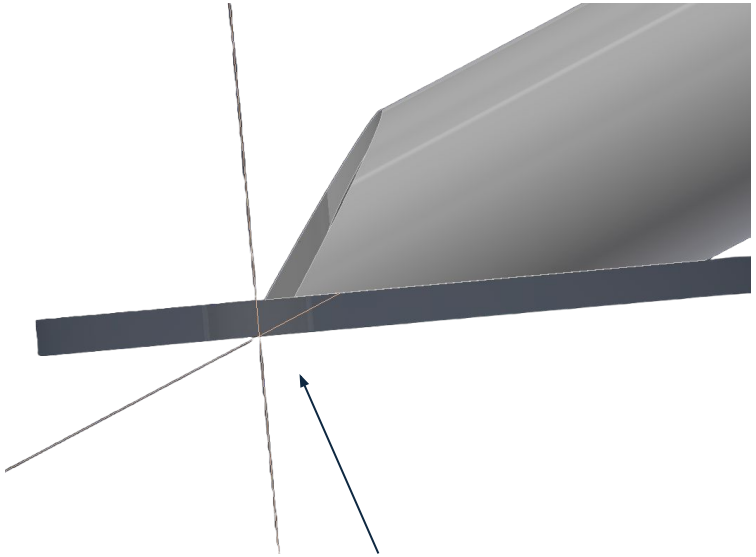

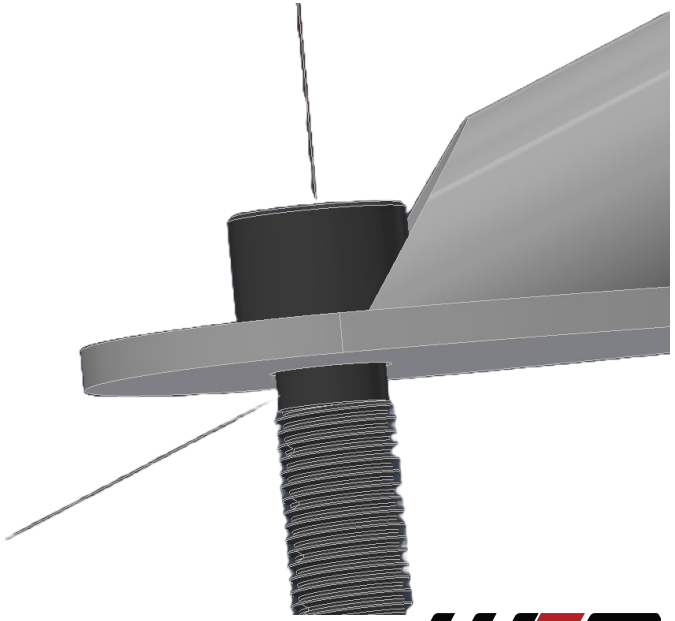

Design Inputs

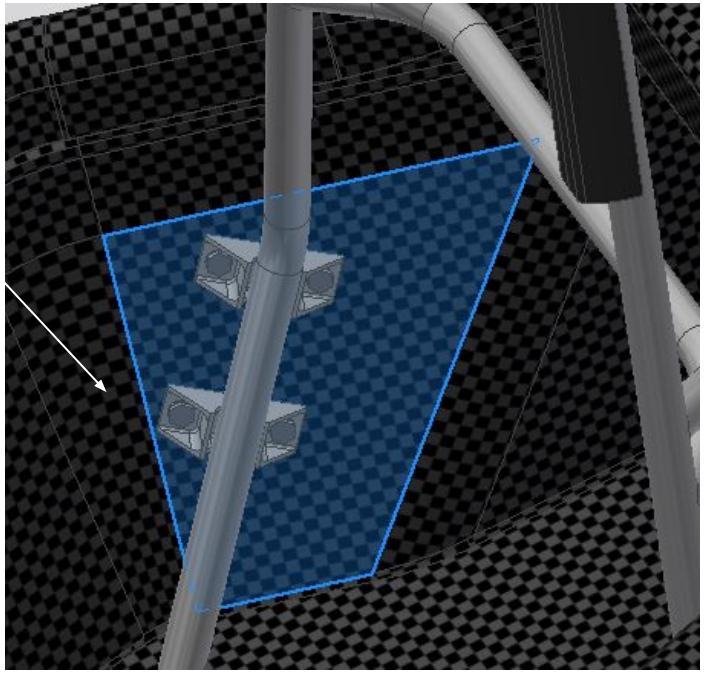

MRH

- Inside the monocoque (constrained to geometry)
- Must be wide enough for accumulator to slide in and out
- Mounting Panels
- Mounts are as far forward as possible, which in ARG25 helped with weight savings

FRH

- Monocoque hump was reduced by 0.75in
- Must be laminated into the monocoque
- Bends must be 3x the outside diameter

Design Inputs

Shoulder Harness

- T.2.6.1: From the driver's shoulders rearwards, the Shoulder Belt Side View Angle must be between 10° above the horizontal and 20° below the horizontal
  - 5 to 7 degrees below

AIP

- F.8.2.1: Must be either >= 1.5mm thickness steel or >= 4.0mm thickness aluminum plate
- Bolt holes restricted by front bulkhead cutout and pucks

Design: Front Roll Hoop

- Rules clarification allowing us to take the bottom ends off!
- Due to dash hump reduction by 0.75in, hoop was moved forward and down
- Geometry shifted slightly to be flush with the core

Design: Main Roll Hoop

- With FRH moving down, MRH height had to be increased for the protection envelope
- Mounts at edge of panel due to position of MRH needing to be at the widest part of the monocoque for accumulator

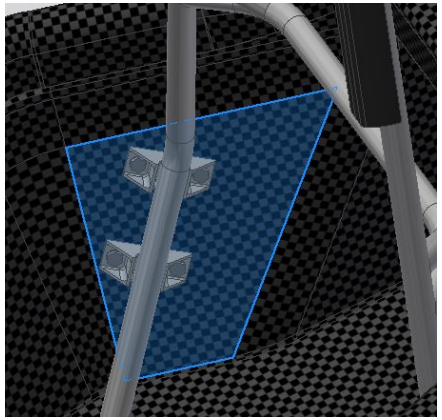

Design: Shoulder Harness

- New part to reduce the back hump of the monocoque, removing area where SH tabs would be
- Validated Height with angle constraints
- Brace Angle
  - 40 degrees to optimize weight

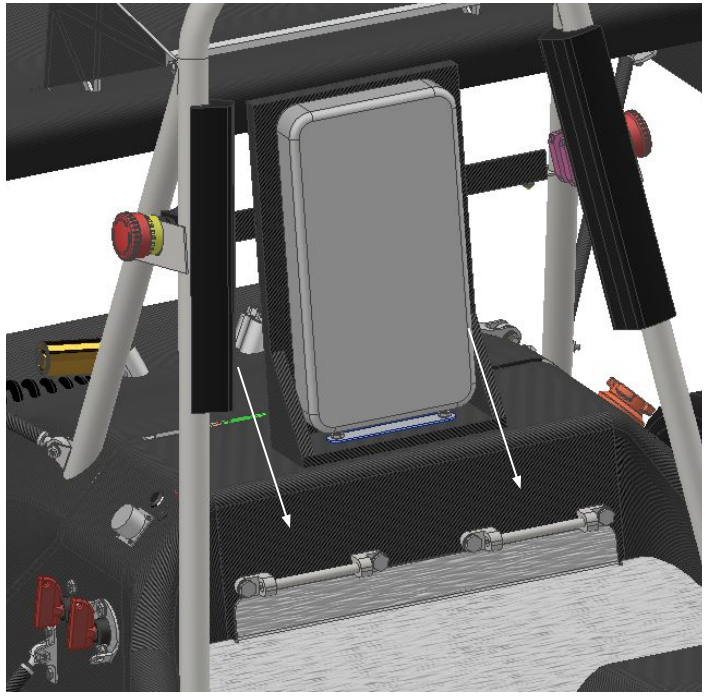

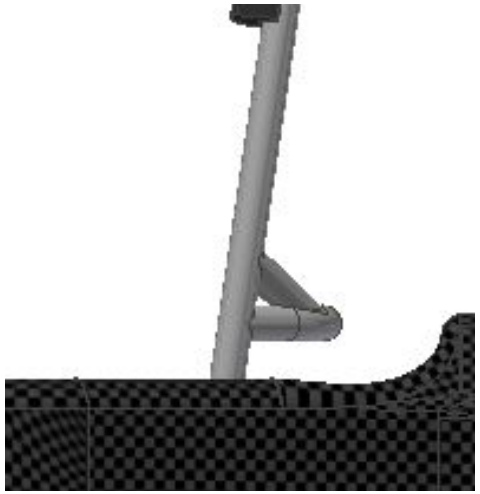

Design: Anti-Intrusion Plate

- Keyhole cutouts for accessibility
- Rules clarification to check if this is allowed
- Hole locations (close to edge)

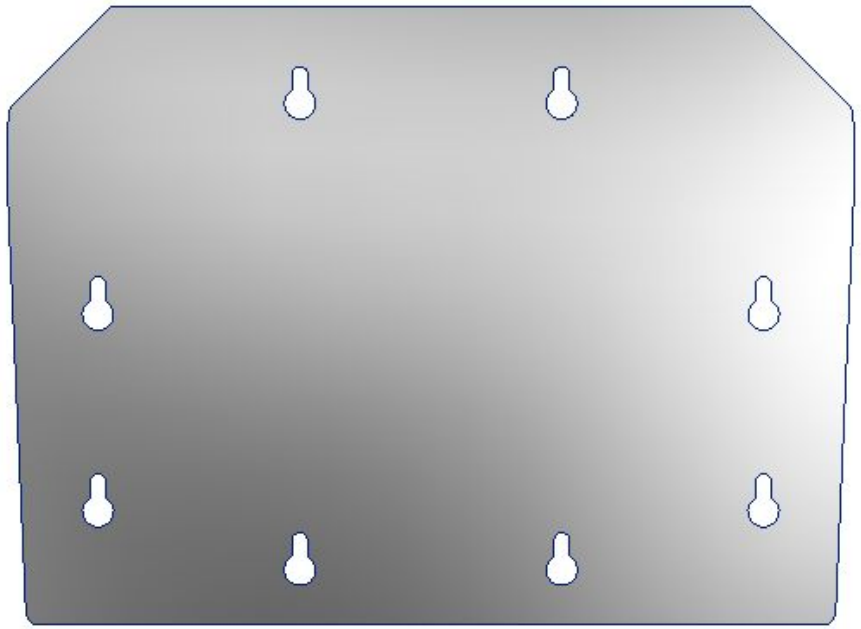

Weight Analysis

Roll Hoop

	2026	2025	Difference:
MRH	7.410 lbs	7.262 lbs	+0.148 lbs
MRH Braces	2.463lbs	1.916 lbs	+0.547 lbs
FRH	4.010 lbs	4.866 lbs	-0.856 lbs
Shoulder Harness Bar & Braces	1.722 lbs	2.006 lbs	-0.284 lbs
TOTAL (RH assembly - some minor changes in bolt lengths)	17.751 lbs	18.153lbs	-0.402 lbs

Front Protection

AIP	3.233 lbs	3.634 lbs	-0.401 lbs
Total (Front Protection)	4.708 lbs	5.261 lbs	-0.553 lbs

Total Savings: 0.955lbs

ARG 26

ARG 25

Integration

- Rear Wing Welded tabs
- RTML/ TSSI tabs welded to top of MRH
- Steering Wheel isn't compliant with protection envelope at max tilt
  - Designer will modify the height
- Head Restraint mounts
- Nosecone mounting to AIP

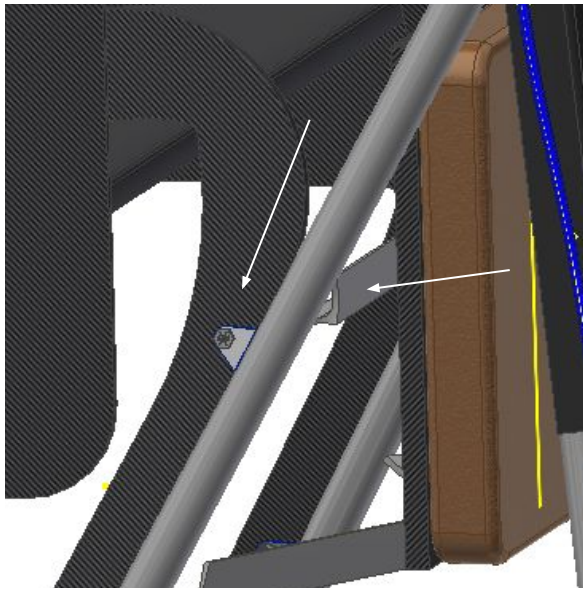

Manufacturing/ Assembly

- Roll Hoops
  - Main Roll Hoop, Braces, and SH - welded, bolted to monocoque
  - Send drawings to VR3 Engineering to manufacture
    - including SH bar and braces
  - Mounts are manufactured in-house
  - Front hoop is laminated into monocoque
- Anti Intrusion Plate
  - Send-cut-send for aluminum plate
- Impact Attenuator
  - Standard, bought
- Pucks
  - 3D printed

Looking Forward

- Work with ergo to confirm positioning and tab design for the belt attachment to the SH
- Confirming geometries after ADR
- CAD pucks- based on SES
- Keeping an eye on the rules clarifications

Timeline

- October- FDR
  - Confirm Design
- November- December:
  - Both RH and SH designs should be sent to VR3 to be manufactured (2 week turnaround time)
  - Sendcutsend AIP
  - Order IA
  - Machine mounts
- JanMan:
  - Laminate the Front Hoop into the monocoque
- January 14th
  - Monocoque drop
- By January 21st (Rolling Chassis)
  - Mount the Main Hoop to the monocoque
  - Mount the IA and AI Plate to the front bulkhead of the monocoque
- February 1st
  - First Drive!
- February- June
  - Test composite AIP with new carbon fiber

Appendix A (Rules & Tech)

https://docs.google.com/document/d/1XSOv0Bt2ECsKdsCcupTOFtkKkbTzaKcRm2K8BFJh-Kk/edit?usp=sharing

This document goes through it all

Appendix B (CAD and Integration)

ARG26

ARG25

Appendix B (CAD and Integration)

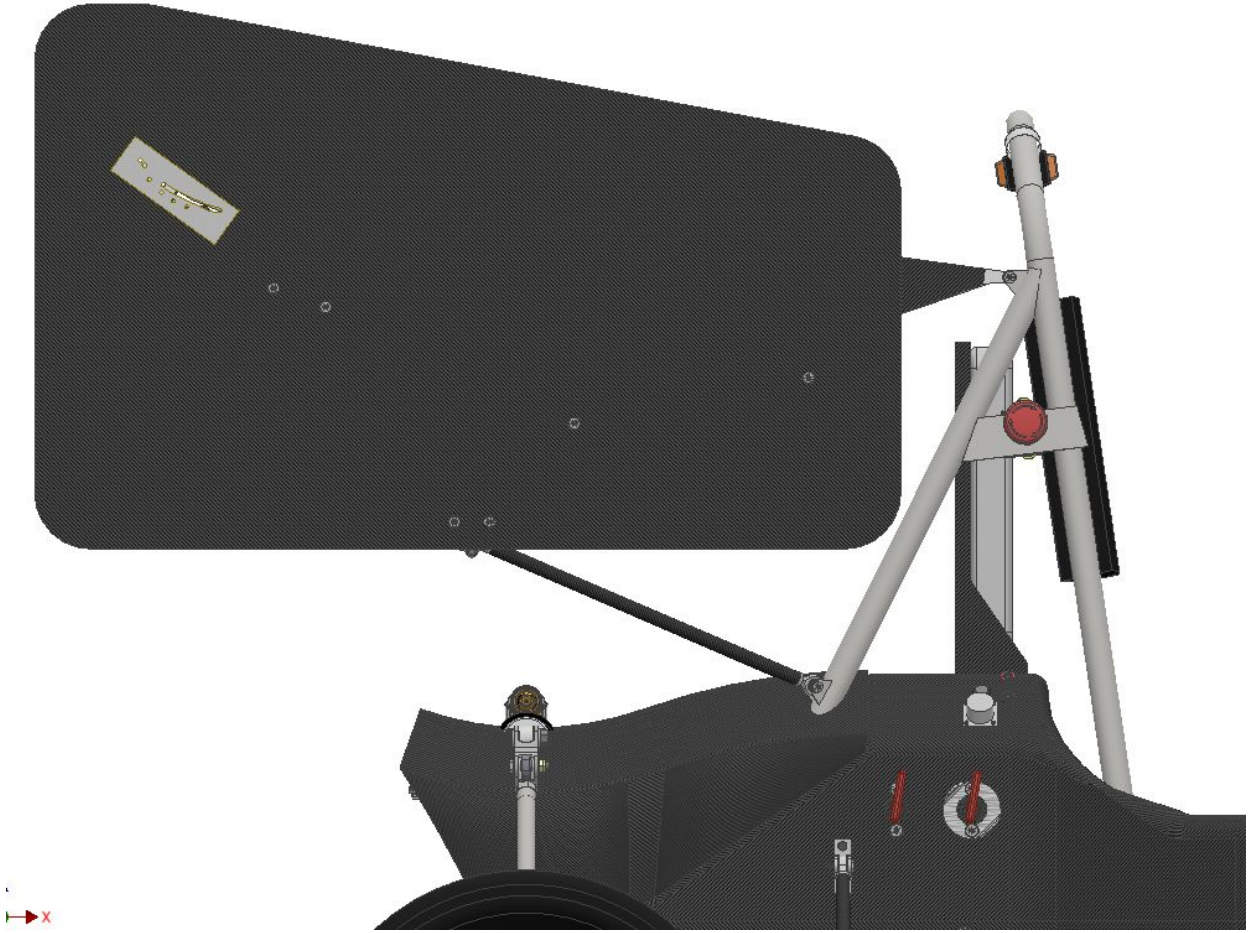

Appendix B: Rules Clarification

Rules Rep

10/14/2025 8:27:58 PM ET

Vance Weber
Rules Rep since 2024

Based on rule sections F.5.7 and F.7.4.3 there is no requirement to encapsulate the front hoop into the floor of the chassis laterally. You should be fine removing the portion of tube that is circled in red. “F.5.7.3 The Front Hoop must extend from the lowest Frame Member on one side of the Frame, up, over and down to the lowest Frame Member on the other side of the Frame.”

Let me know if you have any other questions!

Dear Formula SAE Rules Committee,

I’m writing on behalf of Cornell FSAE Racing to request a clarification regarding the location of the shoulder harness braces.

According to bent tube rules, F.5.2.3.a states:

"The support tube attachment point must be at the position along the bent tube where it deviates farthest from a straight line connecting the two ends"

To clarify, which specific two ends is the straight line connecting to? Is it referring to the two ends of the bent portion of the shoulder harness (excluding the straight sections)?

Thank you for your time and assistance!

Appendix C (Analysis/Ansys)

Roll Hoop

	2026	2025	Difference:
MRH	7.410 lbs	7.262 lbs	+0.148 lbs
MRH Braces	2.463lbs	1.916 lbs	+0.547 lbs
FRH	4.010 lbs	4.866 lbs	-0.856 lbs
Shoulder Harness Bar & Braces	1.722 lbs	2.006 lbs	-0.284 lbs
TOTAL (RH assembly - some minor changes in bolt lengths)	17.751 lbs	18.153lbs	-0.402 lbs

Front Protection

AIP	3.233 lbs	3.634 lbs	-0.401 lbs
Total (Front Protection)	4.708 lbs	5.261 lbs	-0.553 lbs

Total Savings: 0.955lbs

Appendix D (Bill of Materials)

Part	Material	Quantity	Vendor
Main/Front Hoop	1” x 0.095” wall thickness 4130 tube	1x Main Hoop 1x Front Hoop	VR3
Main Hoop Braces	1” x 0.065” wall thickness 4130 tube	2x	VR3
Shoulder Harness	1” x 0.095” wall thickness 4130 tube	1x	VR3
Shoulder Harness Braces	1” x 0.049 wall thickness 4130 tube	2x	VR3
Main Hoop Mounts	Steel 1018 stock	4x	McMaster
Al Plate Aluminum	6061 T6 Aluminum Sheet Metal	1x	SendCutSend
Impact Attenuator	Standard honeycomb IA	2x	Plascore
Backing Plates	Steel 4130 stock	6x	McMaster
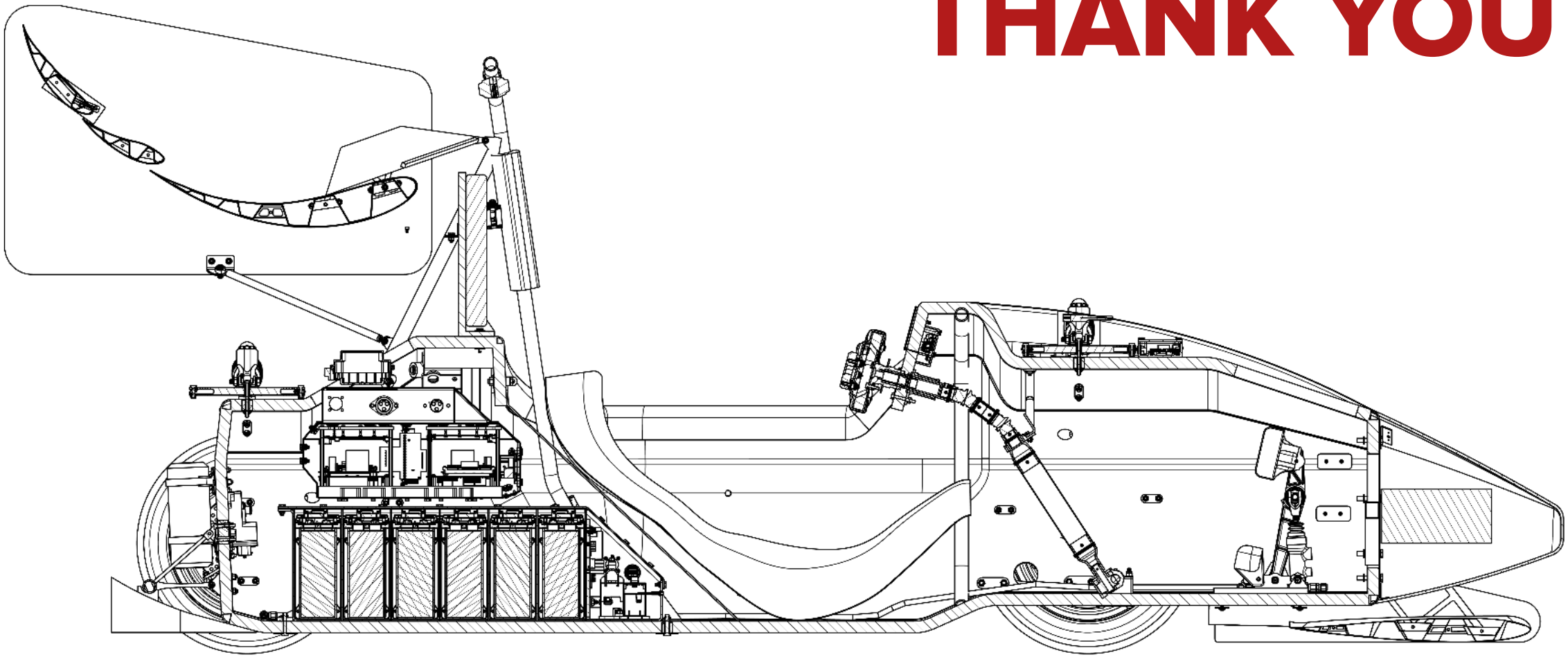
THANK YOU